TECHNICAL DATA

SHEET 11AA

SQUARE SUPPORT POST
BARBER POST

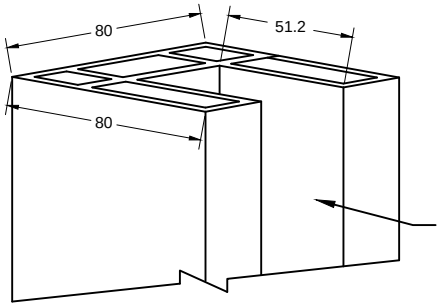

Arco Heavy Duty Extruded Aluminium Post. (Barber Post) Design to conceal and support the Roller Grille or Aluminium Roller Shutter standard guide.

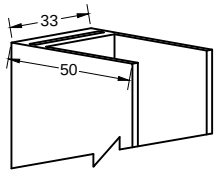

ARCO STD EXTRUDED ALUMINIUM
SIDE GUIDE CHANNEL

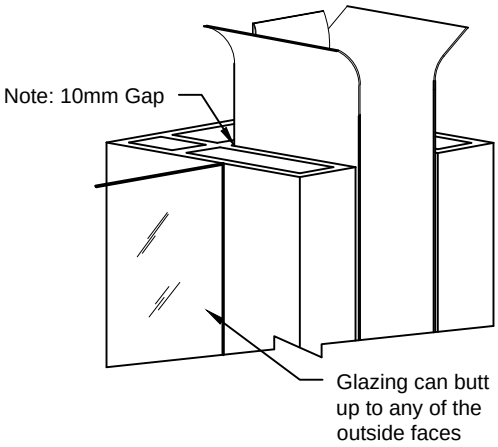

The guide protrudes from the top of the square post with the top flared. The side guide is positioned to give a flush finish with the face of the post. This allows for a 10mm gap between the back of the guide and the inside of the post.This unique feature allows ARCO to install or service the door without interrupting the ceiling/bulkhead or removing the posts.

Base and head fixing plates are available as an optional extra.

ARCO (QLD) has a continuous program of product development and reserves the right to change specifications at any time without notice

ARCO(QLD) Pty. Ltd. ABN 27 108 275 896
334 Christensen Road South, Stapylton, QLD 4207 I Tel: 61 - 7 3807 5364 I Fax: 61- 7 3382 7929
web: www.arcoqld.com.au